MOTOR POWER COMPANY

MTR AD

User Manual



Summary

Contents of this document 4
General Information 4
Product Information 5
Components 5
Nameplate 5
Product description 6
Overvoltage and Undervoltage protection 6
Temperature Monitoring 6
MTR AD CAN bus version 6
Operating modes 6
CAN bus default settings 7
Technical Data 7
MTR AD CAN/IO 35W 7
Connector 8
Roller Specification 9
Mounting and Installation 14
Electrical Installation Warnings 16
Electrical Installation 16
Transport and storage 17
Transport 17
Storage 17
Maintenance and cleaning 18
Warnings for assembly 18
Commissioning and operation 19
Warnings for commissioning and operation 19
Startup 19
Verification before to first commissioning 19
Operation 19
Verification before to first commissioning 19
Procedure in case of injury or anomaly 19
Maintenance and cleaning 20
Maintenance 20
Motoroller verification 20
Motoroller replacement 20

Cleaning....20
Instructions in case of anomalies....22
Trouble shooting....22
Decommissioning and disposal....23
Decommissioning....23
Disposal....23
Document Versioning....24

Contents of this document

General Information

This user manual describes the following types of Motorpower Co. motorized rollers:

- **Motoroller AD I/O** with analog interface, 48 V DC
- **Motoroller AD Can** with CANopen digital bus interface, 48 V DC

Both motors are rated at **35W**.

In the following sections, the designation **"Motoroller"** or, alternatively, the type designation **"MTR AD"** may be used in certain cases.

This user manual is an integral part of the product and contains important instructions and information regarding the various operating phases of the Motoroller. The manual describes the Motoroller as it is configured at the time of delivery by Motorpower Co.. The latest version of this user manual is available online at:

Download | Motor Power Company

All instructions and warnings in this user manual have been compiled in accordance with current regulations and requirements, as well as the state of the art. Special versions are subject to specific contractual agreements and technical documentation in addition to this user manual.

- **Read the user manual first** and follow its instructions to ensure flawless and safe operation and to fulfill any warranty claims.

	***NOTICE:** The manufacturer assumes no liability for damage or malfunctions resulting from failure to comply with this user manual.

Should you have any further questions after reading the manual, please contact Motorpower Customer Service. Customer contacts are available in I nostri indirizzi | Motor Power Company

Product Information

Components

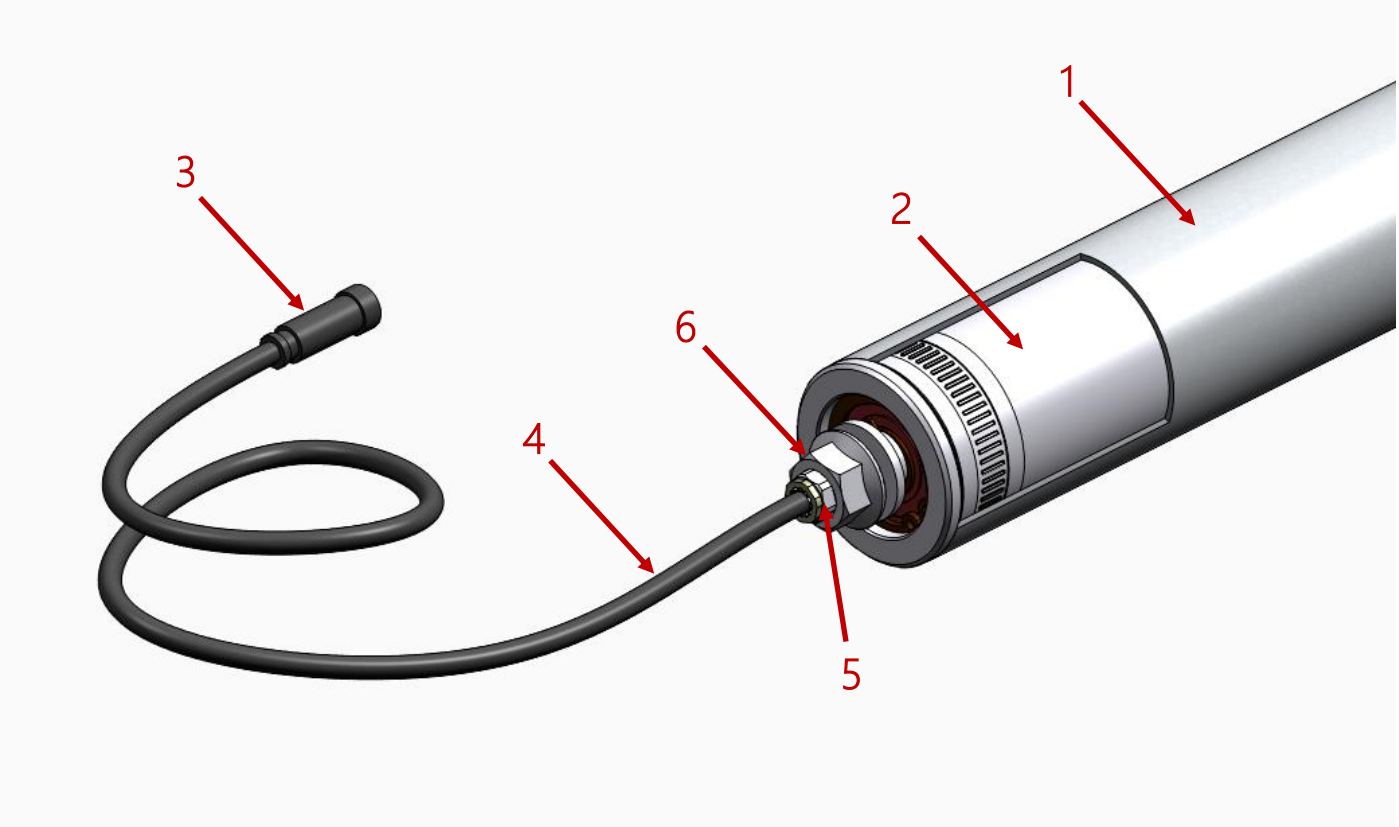

1. External cartridge
2. MTR AD
3. Motor connector
4. Motor cable
5. Motor axis
6. Flanged nut for fixing to the conveyor

Nameplate



Product description

The Motoroller AD can be used on both straight and curved sections, ensuring a constant transport speed. Both the motor and the control electronics are integrated within the roller itself. Both interface variants (analog / CAN bus) of the roller are available in the **35W version**.

Overvoltage and Undervoltage protection

The electronics of the MTR **AD** can detect overvoltages caused by incorrect power supply or regeneration due to malfunctions or excessive motor load. If **56V** is exceeded, an **Overvoltage error** is signaled. Conversely, should the voltage drop below **16V**, an **Undervoltage error** is reported. The latter is automatically reset once the voltage exceeds **22V**.

Temperature Monitoring

The temperature of the motor and control electronics integrated within the MTR AD is continuously monitored. If the maximum permissible temperature is exceeded, the motor disables itself and an error signal is triggered. Once the overheated components have cooled down, the error signal is reset.



In the CAN version, all the errors can be monitored and reset via the interface DevEx.

MTR AD CAN bus version

The CAN bus communication of the Motoroller with integrated drive complies with the following CAN / CANopen standards:

- **CiA 402:** CANopen device profile for electrical drives
- **CiA 305:** Layer Setting Services (LSS)"
- **CiA 302:** CANopen Application Layer and Communication Profile – Framework for Multi-level Networking and System Management

CAN bus communication allows, for instance, the reading of the actual values (monitoring) of the Motoroller:

- Number of starts / stops
- Operating hours (ready for operation)
- Running time (time duration with the motor rotating)
- Minimum temperature
- Maximum temperature
- Actual temperature
- Number of Quick Stops
- Average power
- Rotational speed (RPM)"

Operating modes

The **AD Motoroller CAN version** can be operated in several modes:

- **Velocity mode**

- **Current mode**
- **Position mode**

In specific applications, this allows the Motoroller to be moved with **millimeter precision**.

Furthermore, the user has the option to use different **tuning** settings to verify motor performance with specific **velocity, position, or current gains**.

CAN bus default settings

- **Node ID:** 1 (LSS mode for dynamic address assignment)
- **Baud rate:** 250 kBit/s"

Default acceleration settings for MOTOROLLER 46 AD CAN (also applies to MOTOROLLER 46 AD I/O)

To provide an optimal acceleration ramp, the MOTOROLLER 46 AD CAN/I/O is preset with the following acceleration values:

	MOTOROLLER 46 AD 35W
ACCELERATION VALUE, MM/S²	6600
DECELERATION VALUE, MM/S²	6600

These values define the fastest possible acceleration/deceleration and are entered into the Motoroller in the **SDO objects "6083h / 6084h"**.

OBJECT- ID	SUB INDEX	NAME	DATA TYPE	ACC	DEFAULT	MAPPING
6083H	00h	Profile Acceleration	UINT32	rw	6600	mandatory
6084H	00h	Profile Deceleration	UINT32	rw	6600	optional

For more information concerning CAN bus, refer to “CANopen_Interface_MTRAD”. It can be found in download area Download | Motor Power Company

Technical Data

MTR AD CAN/IO 35W

	MOTOROLLER 46 AD 105 29
Rated voltage	48VDC
Voltage range	From 18V to 56V

Rated current	1,37Arms / 1,93Arms
Stall current	1,47Arms / 2,09Arms
Signal digital input switching threshold. “rotation sense”	“High”: U>6,9V “Low”: U<4,28V
Signal analog input	From 1V to 10V (up to 24V tolerant)
Supply voltage ripple	16%
Ip protection	IP54
Ambient temperature during operation	From 0°C to +40°C

***NOTICE:**

Motoroller is able to work with 24V but performances are scaled.

Connector

Motoroller CANopen version

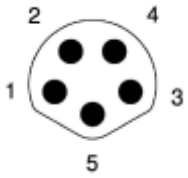

PIN	FUNCTION	VALUE	
1	Power input. voltage (+)	Rated Voltage Voltage range	48V 16 to 56V
2	CAN High		
3	Mass for voltage and signal supply (-)	Ground	
4	CAN Low		

Motoroller DIGITAL I/O version

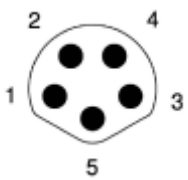

PIN	FUNCTION	VALUE
1	Power input. voltage (+)	48VDC
2	Rotation direction input. Seen from the end of the Motoroller cable	“Low” = anti-clockwise direction “High” = clockwise direction (over 6.9V)
3	Mass for voltage and signal supply (-)	Ground
4	Error Output	Open Collector U_{max}=30V CC Error signal: “High” No error: “Low”
5	Signal digital input switching threshold. “rotation sense”	Analog speed/start signal

Roller Specification

MOTOROLLER AD POWER PACK - GEARLESS MOTOROLLER WITH TUBE

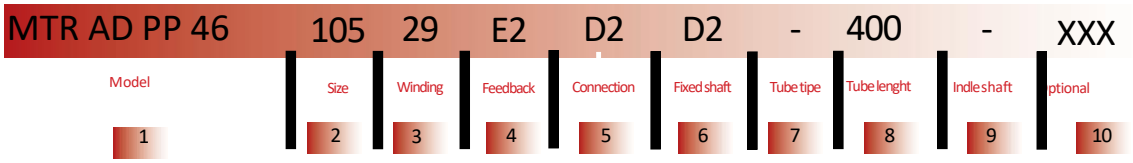

1 Model **MTR AD PP 46**

2 Size MTR AD PP 46 105

3 Winding MTR AD PP 46 29

6 Fixed Shaft 01 Male thread

4 7 Tube Type
01 Standard tube
02 Double grooved tube
03 Conveyor belt tube
04 Poly-V pulley tube
05 Double grooved pulley tube

5 Connection
06 Tapered sleeves tube
07 Double grooved and tapered sleeves tube
08 Poly-V and tapered sleeves tube
09 Double grooved pulley and tapered sleeves tube

8 Tube lenght in mm Referral "R" on drawings

9 Idle shaft
AA hex spring loaded
AC poly-V hex spring loaded
AB female thread
AD poly-V thread

Tube version

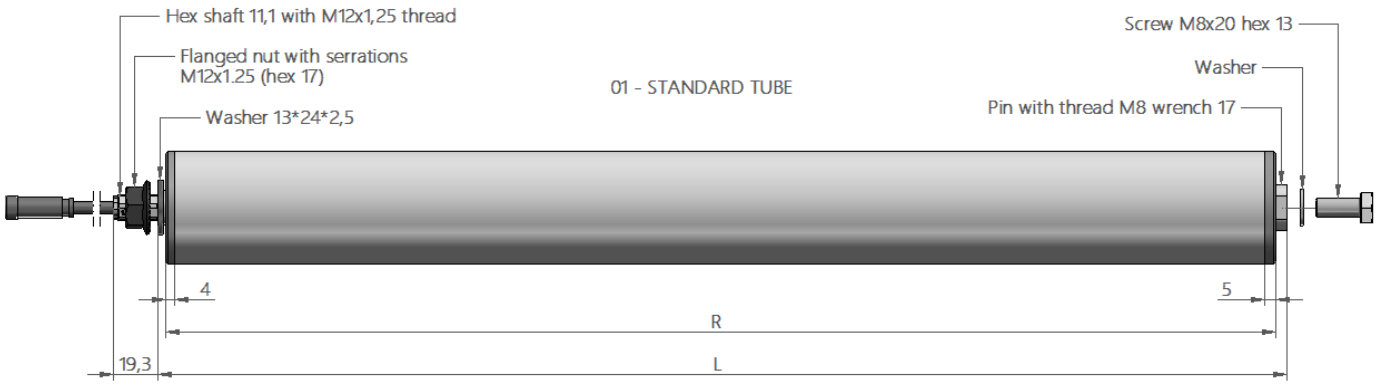

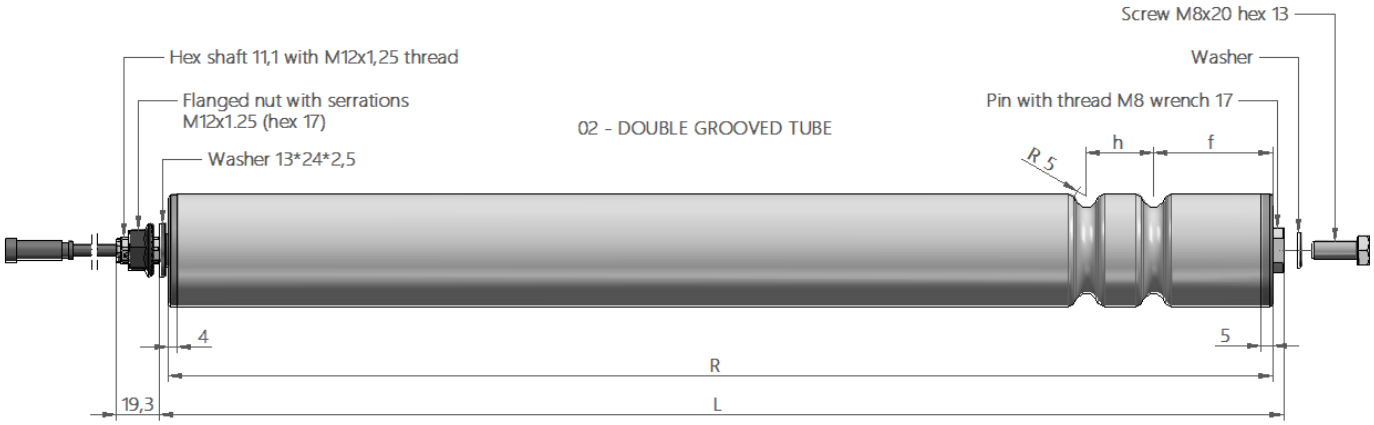

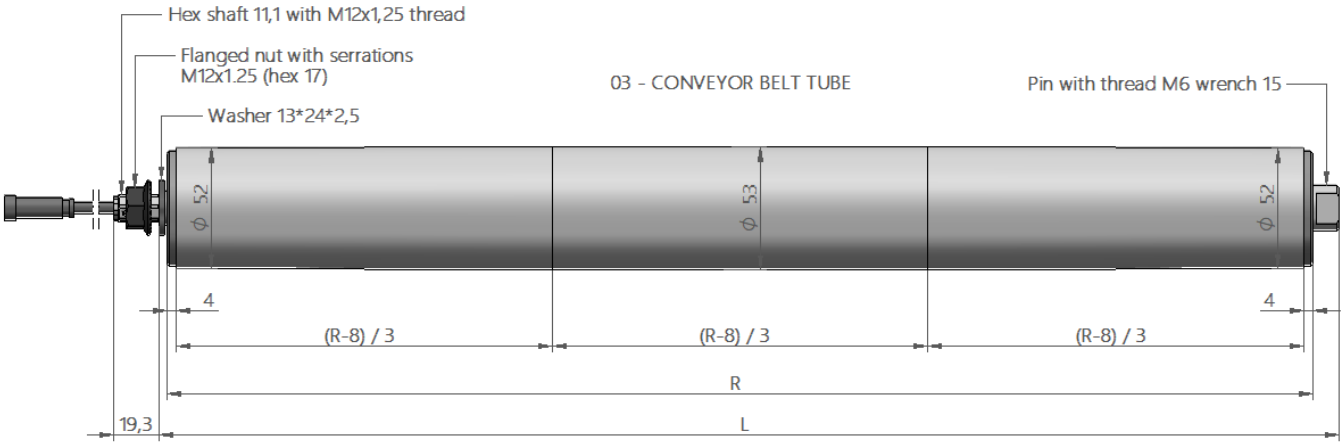

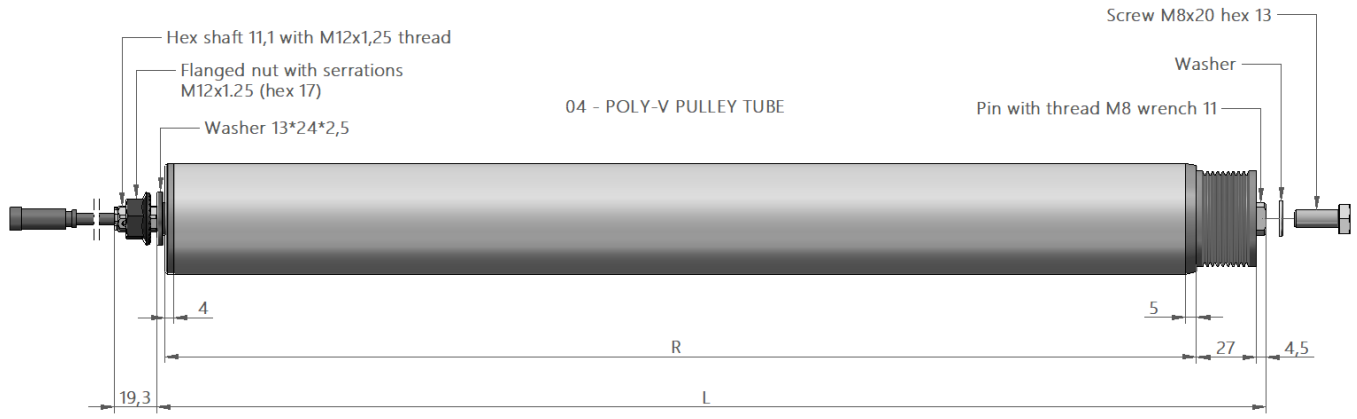
Hex shaft 11,1 with M12x1,25 thread
Flanged nut with serrations
M12x1.25 (hex 17)
Washer 13*24*2,5
04 - POLY-V PULLEY TUBE
Screw M8x20 hex 13
Washer
Pin with thread M8 wrench 11
4
5
R
27
4,5
19,3
L

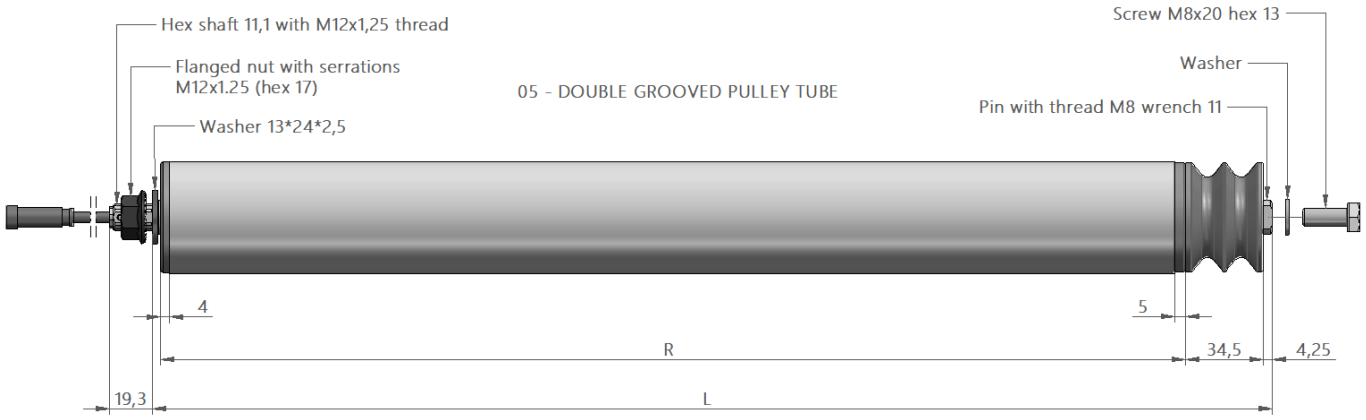
Hex shaft 11,1 with M12x1,25 thread
Flanged nut with serrations
M12x1.25 (hex 17)
Washer 13*24*2,5
05 - DOUBLE GROOVED PULLEY TUBE
Screw M8x20 hex 13
Washer
Pin with thread M8 wrench 11
4
5
R
34,5
4,25
19,3
L

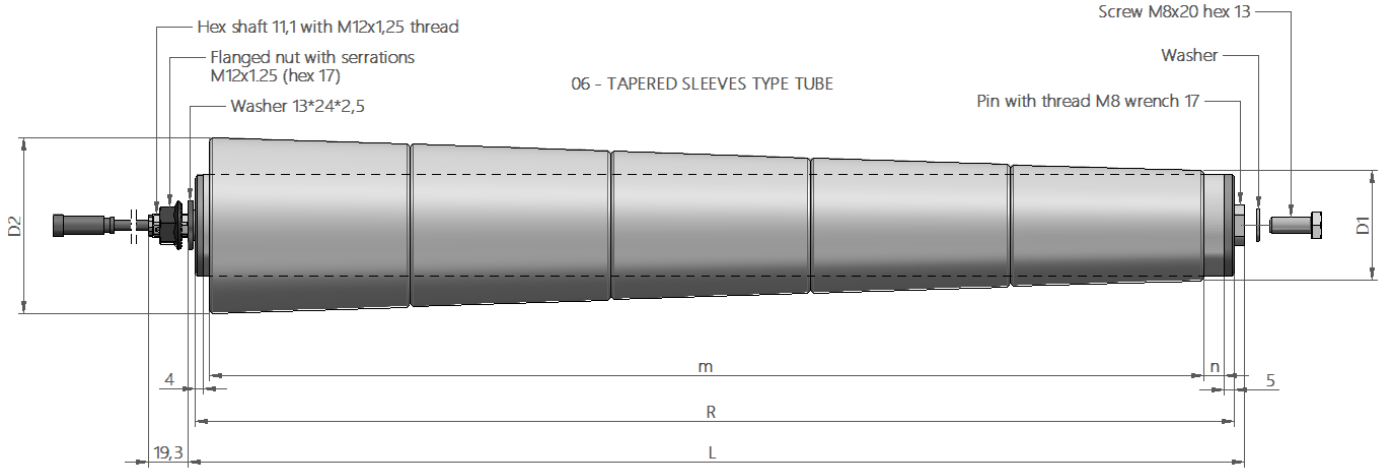
Hex shaft 11,1 with M12x1,25 thread
Flanged nut with serrations
M12x1.25 (hex 17)
Washer 13*24*2,5
06 - TAPERED SLEEVES TYPE TUBE
Screw M8x20 hex 13
Washer
Pin with thread M8 wrench 17
D2
D1
4
m
n
5
R
19,3
L

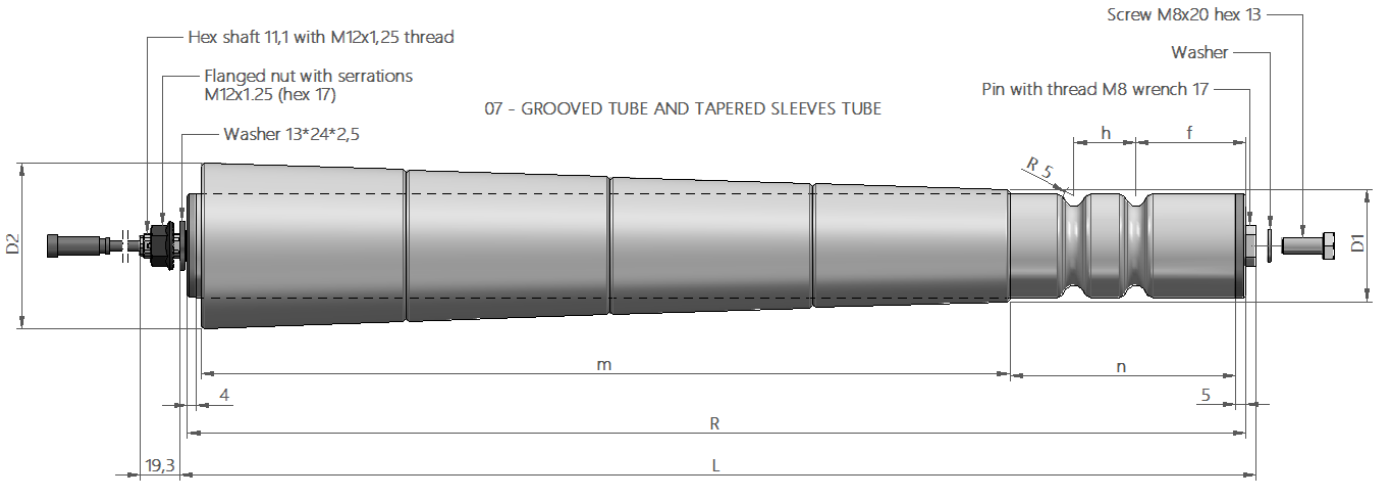
Hex shaft 11,1 with M12x1,25 thread
Flanged nut with serrations M12x1.25 (hex 17)
Washer 13*24*2,5
07 - GROOVED TUBE AND TAPERED SLEEVES TUBE
Screw M8x20 hex 13
Washer
Pin with thread M8 wrench 17
h
f
R 5
D2
D1
m
n
4
5
R
19,3
L

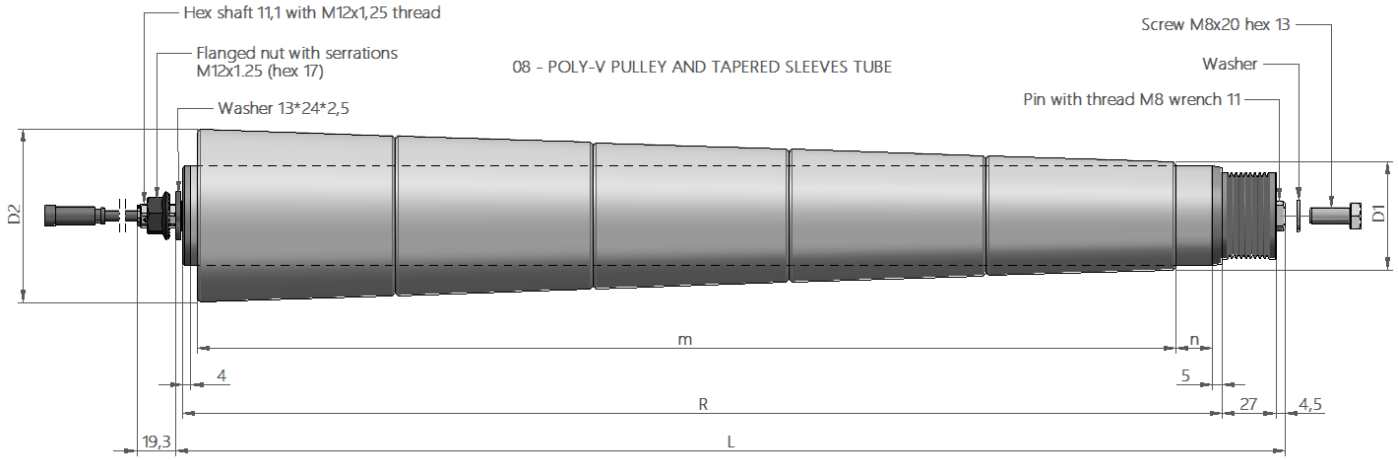
Hex shaft 11,1 with M12x1,25 thread
Flanged nut with serrations M12x1.25 (hex 17)
Washer 13*24*2,5
08 - POLY-V PULLEY AND TAPERED SLEEVES TUBE
Screw M8x20 hex 13
Washer
Pin with thread M8 wrench 11
D2
D1
m
n
4
5
R
27
4,5
19,3
L

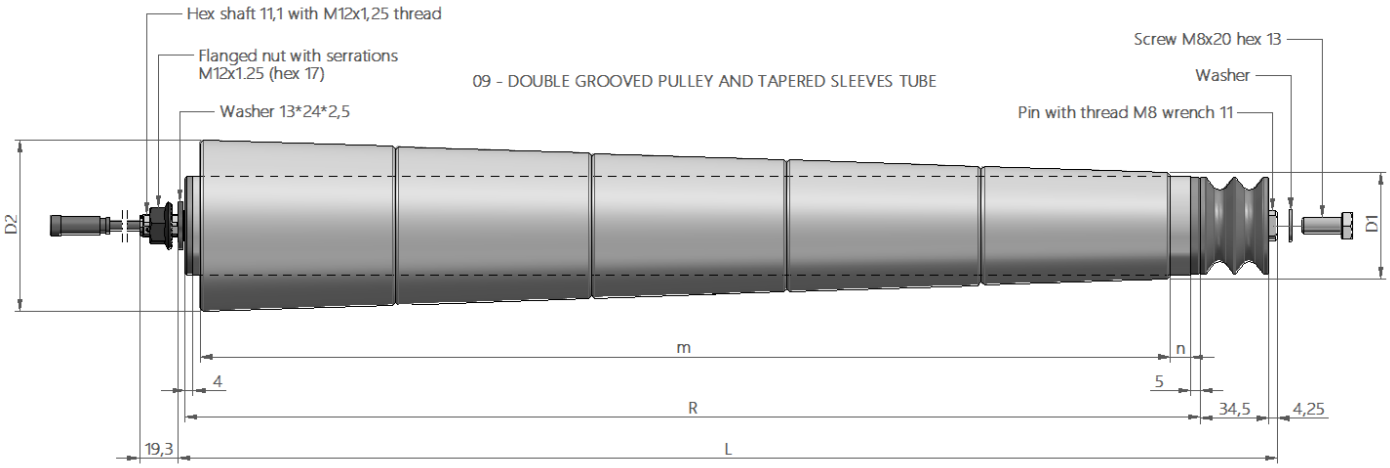
Hex shaft 11,1 with M12x1,25 thread
Flanged nut with serrations M12x1.25 (hex 17)
Washer 13*24*2,5
09 - DOUBLE GROOVED PULLEY AND TAPERED SLEEVES TUBE
Screw M8x20 hex 13
Washer
Pin with thread M8 wrench 11
D2
D1
m
n
4
5
R
34,5
4,25
19,3
L

Mounting and Installation

Remove the packaging material from the motoroller.

Unscrew and remove the flanged nut from the cable.

Insert the motoroller cable and the axle into the **hexagonal hole (min. 11,2 mm)** or the **round hole (min. 12,2 mm)** in the side profile.

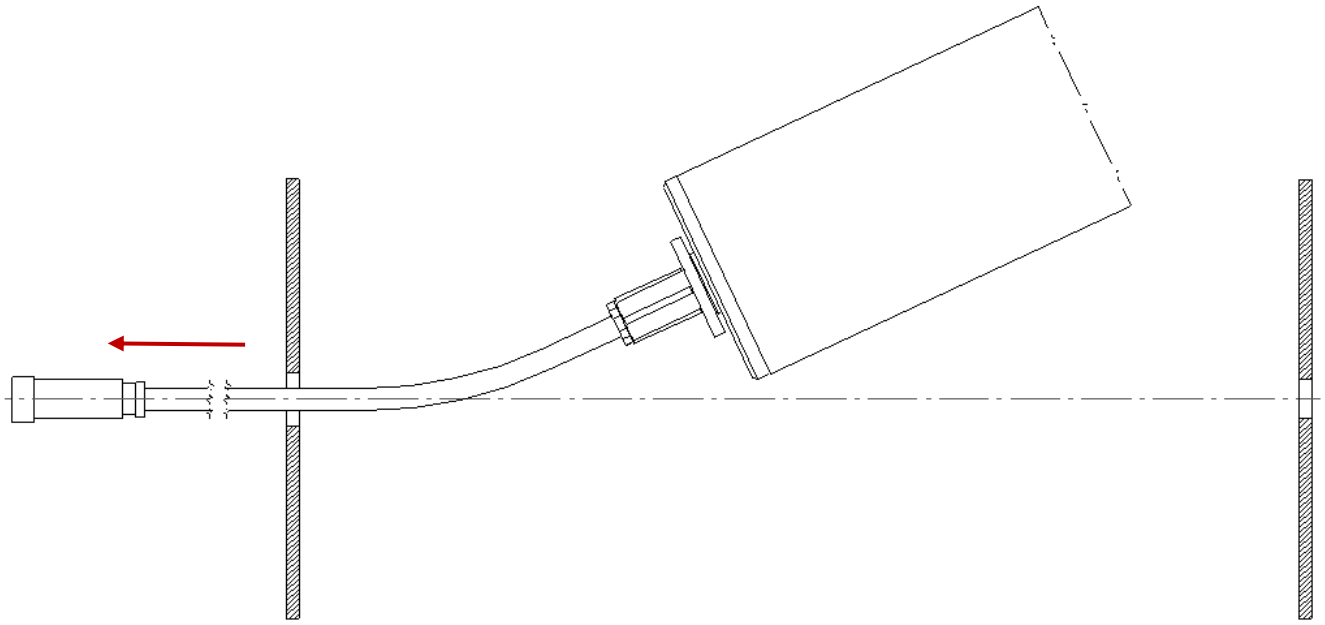

Align the motoroller towards the opening in the side profile

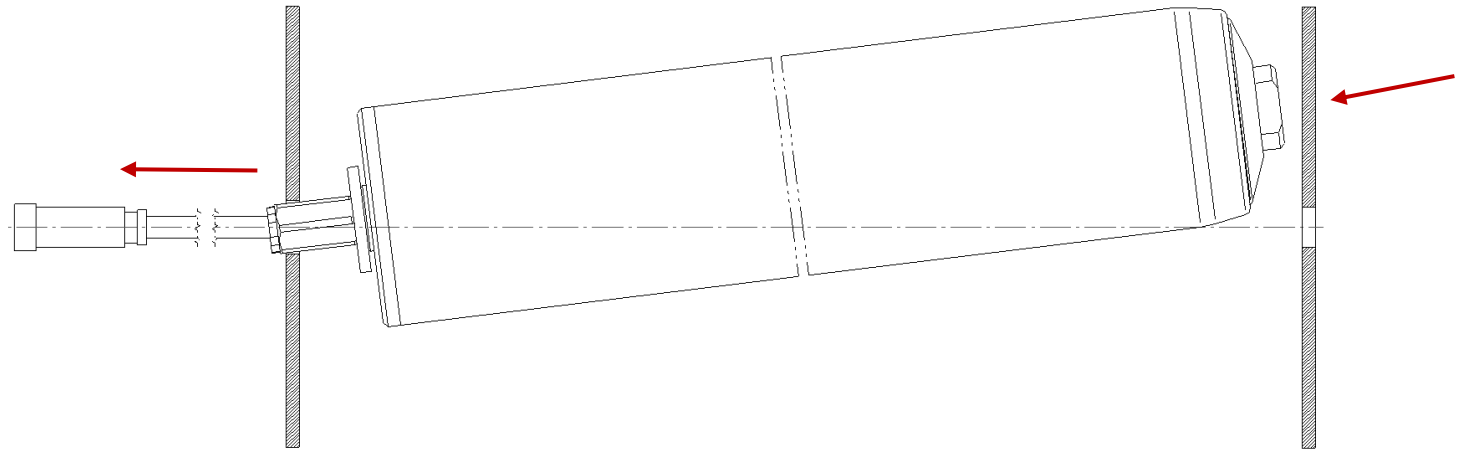

Insert the **M8** screw with the washer into the opening.

Lock the axle pin with a wrench to prevent it from rotating.

Tighten the screw of **20 Nm**.

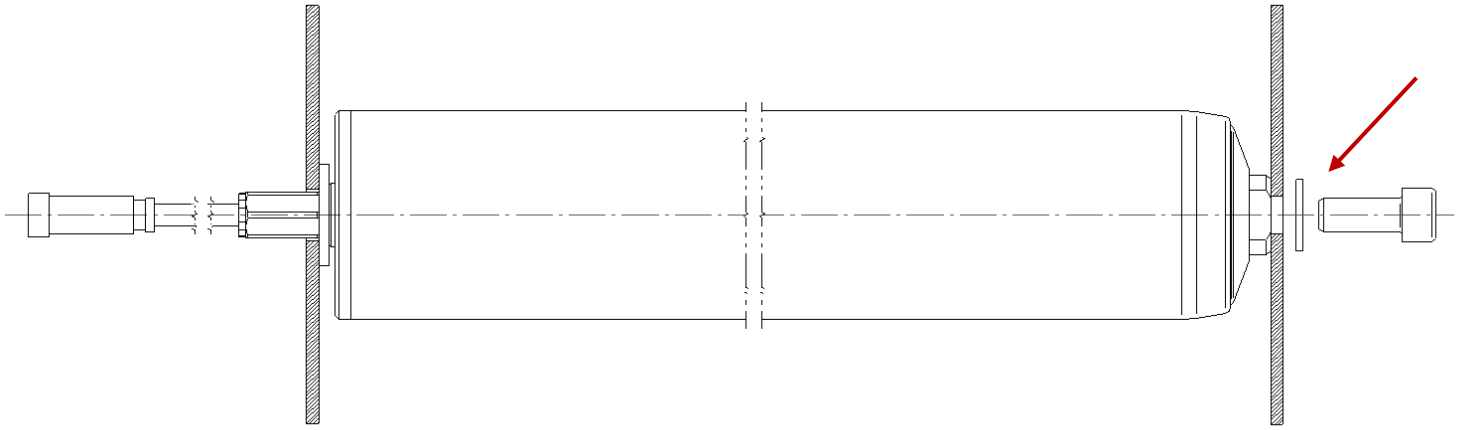

Lock the motor axis with a flanged nut **M12x1,25**.

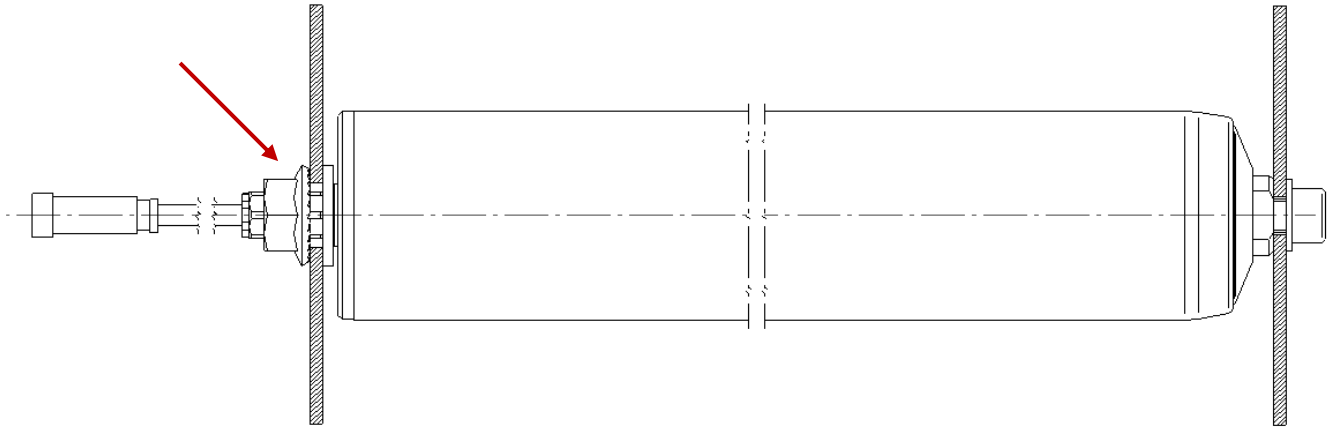

Do not apply axial pulling forces to the roller during mounting.

Maximum fixing torque for **M12x1,25** nut is **30 Nm**.

Electrical Installation Warnings

	**Attention:** **Risk of crushing due to uncontrolled starting of the Motoroller!** Before connecting the Motoroller, disconnect the conveyor system from the power supply and **secure it against accidental restart**

Electrical Installation

Risk of material damage to the Motoroller and/or the Motoroller cables!

- **Never supply the Motoroller with alternating current (AC)**, as this would cause irreparable damage to the device.
- Do not expose the Motoroller connector to **excessive tension or compression**. Bending the Motoroller cable or applying excessive force when inserting the fastening nut could damage the cable insulation, leading to a potential failure of the Motoroller.



If the Motoroller connector is cut, the warranty will be voided!

If an extension cable is used to connect the MTR AD, the length must not exceed 10 m.

	**Attention:** If powering the drive at 48V, voltage drops across the cable must be taken into account, as they lead to a derating of performance.

Transport and storage

Transport

	**Attention:** **Risk of injury due to improper transport!** Transport operations must be performed exclusively by authorized, qualified personnel.

The following instructions must be observed:

- **Avoid strong impacts** during transport.
- After transport, **inspect each Motoroller** for any visible damage.
- In the event of transport damage, **inform the carrier or Motor Power immediately** to avoid forfeiting any claims for compensation.
- **Do not expose the Motoroller to extreme temperature fluctuations**, as this may lead to the formation of condensation.

Storage

	**Attention:** **Risk of injury due to improper storage!** Ensure the **safe storage** of the Motoroller.

The following instructions must be observed:

- **Do not stack pallets** on top of each other.
- After storage, **inspect each Motoroller** for any visible damage.

Maintenance and cleaning

Warnings for assembly

	**Attention:** **Risk of electric shock!** When using the **Motoroller 46 AD 48 V**, the permissible contact voltage of **60 V DC** on the open connector may be exceeded during generator operation.

Risk of crushing due to rotating parts!

- Do not insert fingers between the Motoroller and the round belt or Poly-V belt.
- Install a protective device to prevent fingers from being crushed in the Poly-V belt or round belt.
- Affix suitable warnings/pictograms to the conveyor.

Improper procedures during the installation of the Motoroller can cause material damage or reduce their service life.

- **Do not drop** or misuse the Motoroller to avoid internal damage.
- Before assembly, inspect each Motoroller for any visible damage.
- **Do not hold, carry, or secure** the Motoroller by the cable to prevent damage to internal connections.
- **Do not force** the Motoroller into the side profile. They must fit easily into the side profile.
- Ensure the **correct tightening torque** of the Motoroller 's hexagonal nut to prevent the axle from rotating within the side profile and twisting the Motoroller cable .
- **Do not twist** the Motoroller cable.
-

Commissioning and operation

Warnings for commissioning and operation

	**Attention:** **Risk of crushing and danger from rotating parts due to uncontrolled starting of the** Motoroller**!** • Do not reach between the Motoroller and the support guides with your fingers. • Do not remove the protective device. • Keep fingers, hair, and loose clothing away from the Motoroller.

Startup

Verification before to first commissioning

- **Ensure there is no contact** between objects and rotating or moving parts.
- **Ensure all screws are tightened** according to the specifications.
- **Ensure that no additional hazards arise** from interfaces with other components.
- **Ensure the wiring complies** with specifications and legal requirements.
- **Ensure that no personnel are present** in the danger zones of the conveyor system.
- **Verify all protective devices.**

Operation

Verification before to first commissioning

- **Ensure that no personnel are present** in the danger zones of the conveyor system.
- **Ensure that the Motoroller is not blocked.**
- **Inspect the Motoroller** for any visible damage.
- **Verify all protective devices.**
- **Precisely specify and monitor** the positioning of the conveyed material.

Observe the ambient conditions during operation (see „Technical data“).

Procedure in case of injury or anomaly

- Immediately stop the conveyor system, disconnect the power supply, and secure it against accidental restart.
- In the event of an accident: provide first aid and make an emergency call.
- Inform the responsible supervisors.
- Have the fault repaired by qualified personnel.
- Only restart the conveyor system after authorization from qualified personnel.

Maintenance and cleaning



Attention:

Risk of injury due to improper use!

- Maintenance and cleaning work must be performed exclusively by authorized and trained (qualified) personnel.
- Perform maintenance and cleaning work only when the power supply is disconnected. De-energize the Motoroller and secure them against accidental restart.
- Affix signs indicating that maintenance or cleaning work is in progress.

Maintenance



Attention:

Risk of injury due to uncontrolled movements!

- Damage to the Motoroller cable can lead to uncontrolled behavior (starting, incorrect direction of rotation, etc.)!
- Inspect the Motoroller cable/extension weekly for any visible damage.

Motoroller verification

If the motoroller is not secured according to the installation instructions (see „ motoroller Assembly“), it could rotate within the side profile. As a result, the motoroller cable will twist and may become damaged.

- **One month after installing** the motoroller, check its fastening in the side profile and, if necessary, **re-tighten it using a torque wrench**.
- **Inspect the motoroller monthly** for any visible damage.
- **Once a year**, ensure that the motoroller axle is correctly secured in the side profile.

Motoroller replacement

If a motoroller is damaged or defective, it must be replaced.

Do not attempt to open the MTR AD! “).

Cleaning

- **Remove foreign substances and coarse dirt** from the roller surface.
- **Remove lighter dirt** with a damp cloth.
- **Do not use sharp tools** to clean the motoroller.

Instructions in case of anomalies



Attention:

Risk of injury due to improper use!

- Troubleshooting must be performed exclusively by authorized, qualified personnel.
- Perform troubleshooting only when the power supply is disconnected.
- De-energize the Motoroller and secure them against accidental restart.

Trouble shooting

Anomaly	Possible cause	Deletion
Motoroller doesn't work	Power supply missing or incorrect.	Check the **24 V DC / 48 V DC** power supply.
	Motoroller connector incorrectly connected.	Check the cable connection.
	Motor interface connected, incorrect.	Contact the supplier to verify the **Motoroller Part Number**.
	Drive firmware freezed	If motoroller with CAN interface is connected, update firmware. In the othe case contact the supplier
	Wrong extension cable	Check pin extension cable
The MTR rotates in the wrong direction or at an incorrect speed.	Incorrect speed and direction of rotation settings.	CAN Interface: modify parameters via DevEx Interface I\O Interface: give the correct analog input (speed) or check voltage direction digital input value.
Motoroller operation interrupted	Motoroller cable damaged.	Inspect the Motoroller cable for any damage. If the cable is defective, replace the Motoroller."
	Motoroller overloaded	Place a correct inertial load on the motor.
	Motor regeneration	In the event of sudden braking, the engine may undergo regeneration, causing the power supply level to rise beyond the permitted limits. Reset fault on DevEx Interface or restart the drive.
Unusual noises coming from the Motoroller	Motor unit damaged.	Replace the Motoroller.

Decommissioning and disposal

	**Attention:** **Risk of injury due to improper use!** • Decommissioning must be performed exclusively by authorized, qualified personnel. • Decommission the Motoroller only when the power supply is disconnected. • De-energize the Motoroller and secure them against accidental restart.

Decommissioning

- **Disconnect the Motoroller cable** from the control unit.
- **Remove the outer nut** from the motor axle.
- If the Motoroller is equipped with an axle pin with an **internal thread**, remove the screw on the axle.
- **Remove the Motoroller** from the side profile.

Disposal

The operator is responsible for the proper disposal of the motor. In this regard, local and industry-specific regulations for the disposal of the motor and its packaging must be observed.

Document Versioning

VERSION	DATE	AUTHOR	NOTE
1.0	15/01/2026		First Release
1.1	16/02/2026		Add Images

© 2025 Motor Power Company Srl

Motor Power Company s.r.l.
Reggio Emilia (Italy)
T. +39 0522 682710
info@motorpowerco.it